3.INSTALL MOUNTING BLOCKS

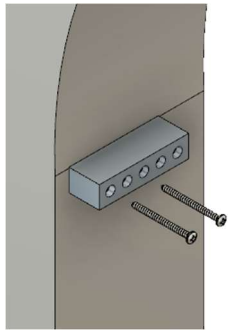

Use at least two long screws to attach the Mounting Block to the wall

Repeat Steps 1,2 and 3 on the other side of the window. Be sure to draw the lines at the same level as the first side.

4. SLIDE SHELF ONTO THE MOUNTING BLOCKS

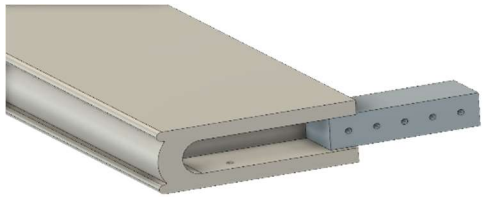

5. INSTALL SAFETY SCREWS

Drive two short safety screws into the pre-drilled holes, to prevent the shelf from accidentally sliding off the mounting brackets

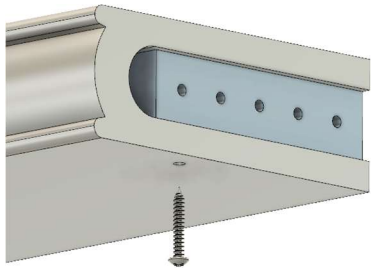

PS0725

Installation Instructions

Palladian Wood Shelf

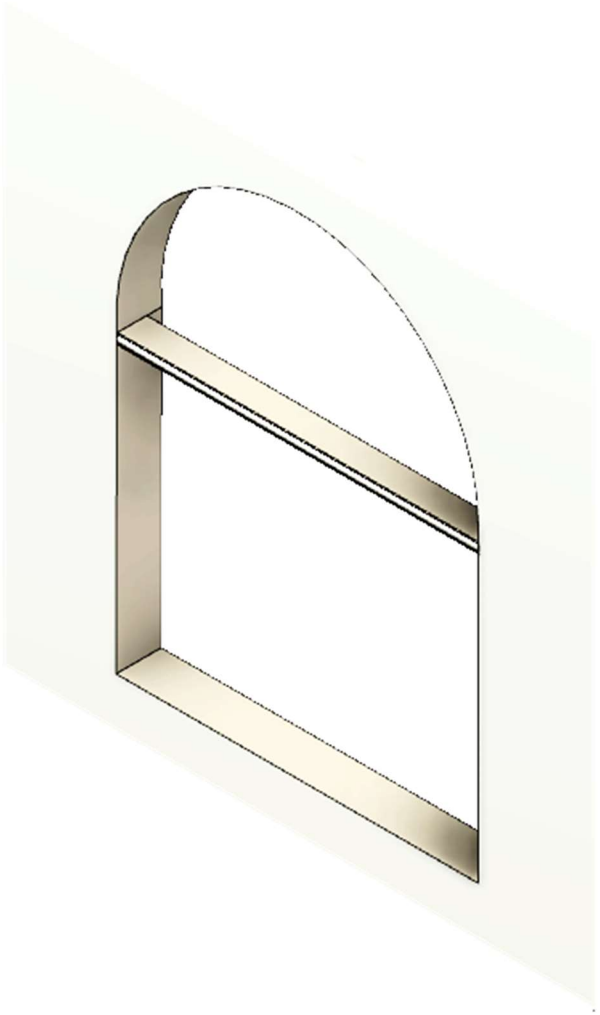

PARTS LIST

Please check your package for contents.

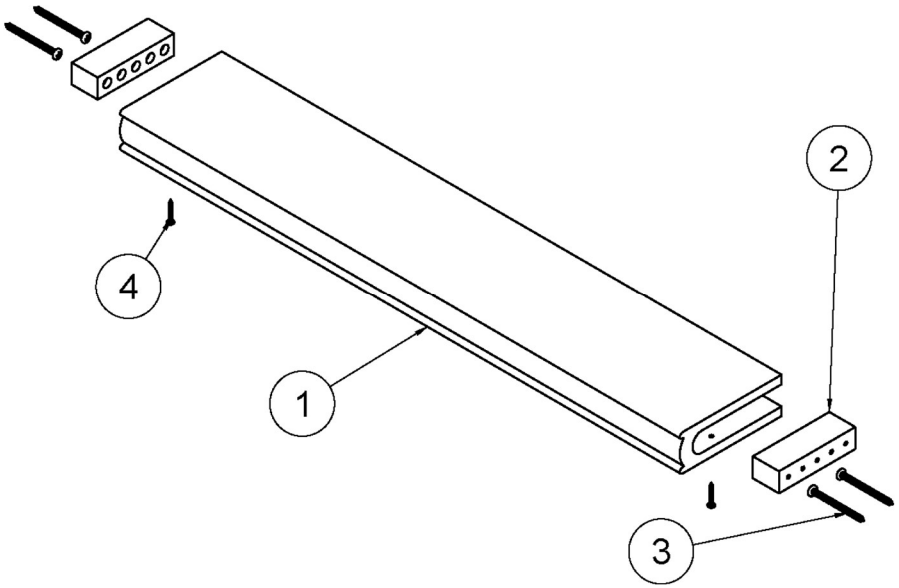

1 – Wood Shelf
2 – Mounting Block (Qty 2)
3 –Mounting Block Screw (#8x 2”) (Qty 4)
4 –Safety Screw (#8 x 3/4”) (Qty 2)

TOOLS NEEDED

Level, Pencil, Measuring Tape, Electric Drill, Phillips Screwdriver

INSTALLATION

1. Mark Mounting Location

Be sure to mark the mounting location on a FLAT vertical wall.

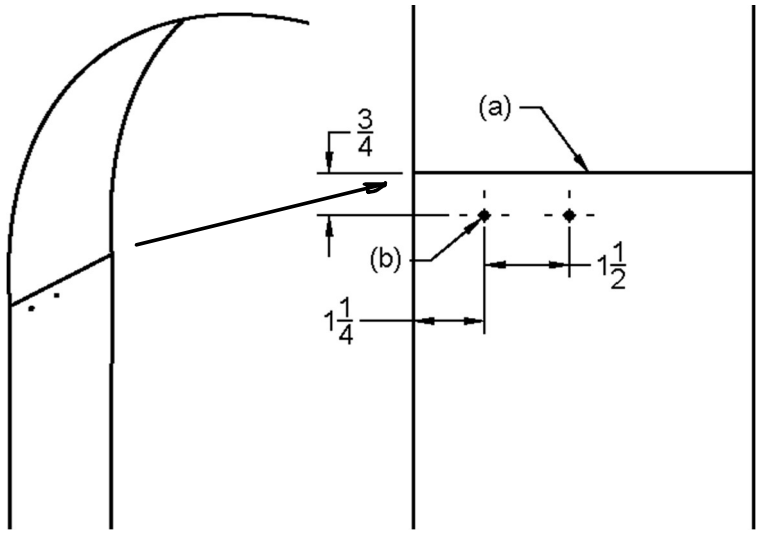

Draw a line (**a**) at the highest part of the flat part of the wall. And then mark another line ¾” below that line and be sure the line is **leveled horizontally**. Mark the location (**b)** of the first screw 1 ¼” inside the end of the wall, and the second screw at 1 ½” along the line.

2. Drill Pilot Holes

With a 3/32” bit, drill two pilot holes. If necessary, use appropriate wall anchors and drill the correct size holes.